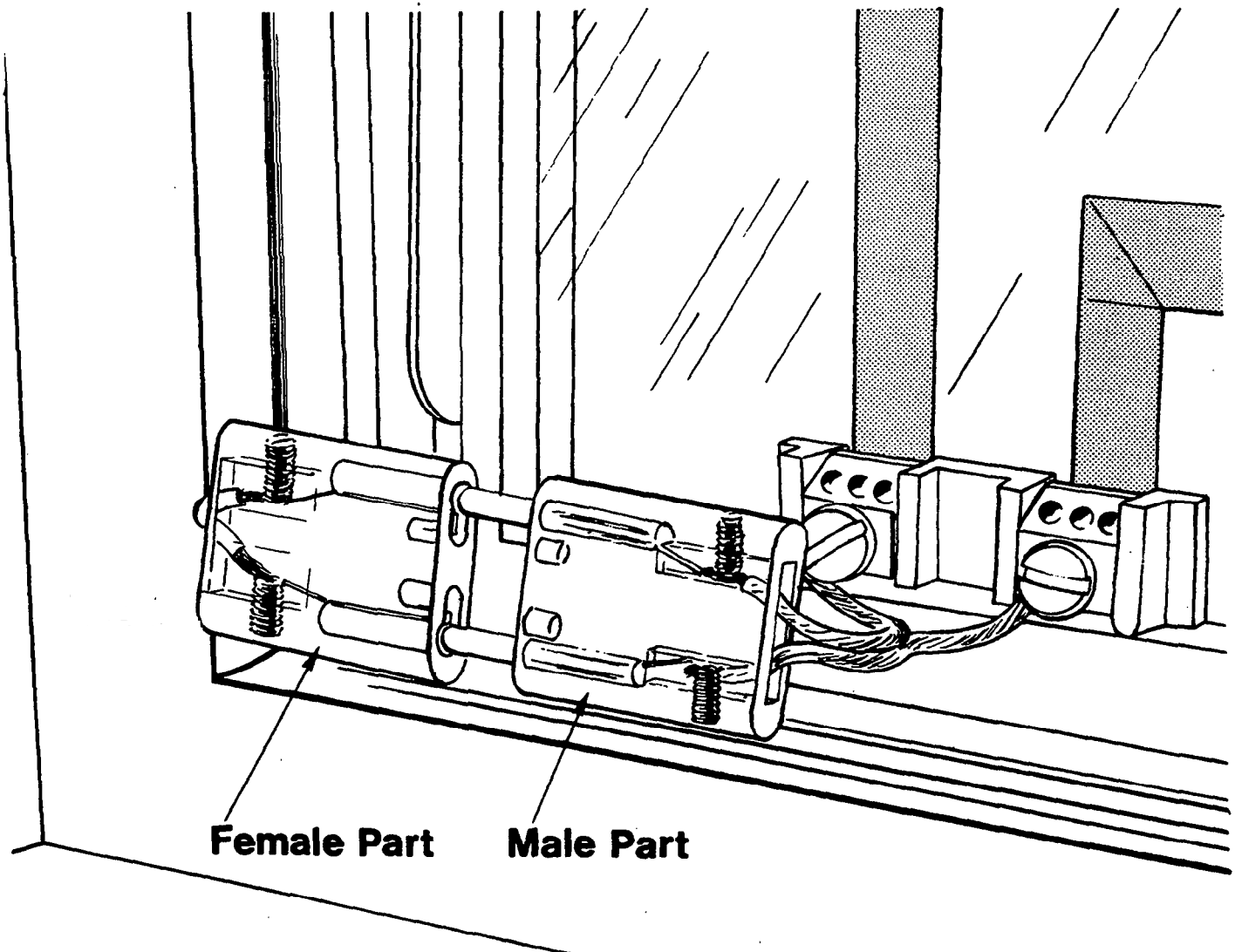


www.AlarmFoil.com